X2 VIDEO X2-CCTV-CAM-200 DATASHEET

Overview

X2-CCTV-CAM-200 is an outdoor, vandal proof, fixed lens dome network camera that produces exceptional 2-megapixel high definition 1080p video footage. The X2 Video professional CCTV range is designed to bring an affordable surveillance solution to the commercial and residential market without compromising quality or reliability. The X2 Video professional IP camera series supports 120dB true wide dynamic range which produces incredibly well-balanced images in harsh lighting conditions. The inbuilt IR array delivers exceptional clarity at night for up to 30m. Fitted with a 4mm fixed lens, this camera is great for covering wide areas to provide a clear focus on essential details. The X2 Video professional CCTV range has been rigorously tested to deliver 24/7 crystal clear video surveillance and comes with a 3 year warranty.

Part Number	Description
X2-CCTV-CAM-200	X2 Video 2MP Outdoor Fixed Lens Dome Camera, 30m IR, 1080p, 120dB WDR, IP67, 4mm

Features

- 1/2.8” Progressive Scan CMOS
- Up to 2-megapixel high resolution
- Full HD1080p Real-time video
- 4mm fixed lens
- 120dB Wide Dynamic Range
- BLC, 3D Digital Noise Reduction
- H.264 Encoding
- Line Crossing and Intrusion Detection
- High performance Smart IR - Up to 30m IR range
- 3-axis adjustment

Dimensions

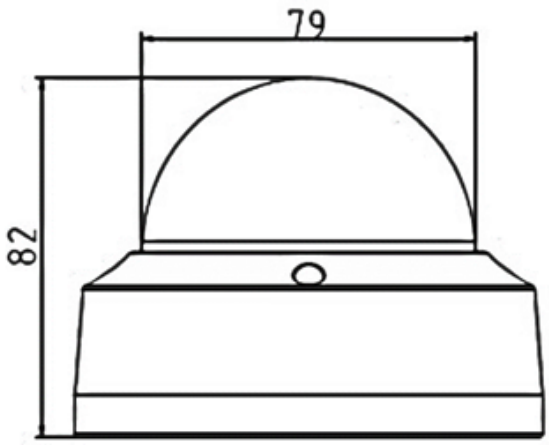

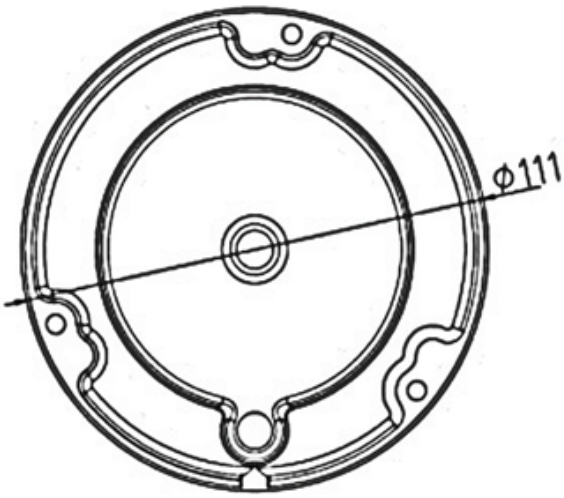

Specifications

Camera	
Image Sensor	1/2.8" Progressive Scan CMOS
Min. Illumination	0.01Lux @ (F1.2, AGC ON), 0.028Lux @ (F2.0, AGC ON), 0 Lux with IR
Shutter Speed	1/3s to 1/10,000s
Lens	4mm @ F2.0 – Horizontal Field of View: 90°
Day & Night	IR cut filter with auto switch
Wide Dynamic Range	120dB
Adjustment Angles	Pan: 0° ~ 355°, Tilt: 0° ~ 75°, Rotation: 0° ~ 355°
Compression Standard	
Video Compression	H.264 / MJPEG
H.264 Type	Main Profile
Video Bit Rate	32 Kbps ~ 16 Mbps
Dual streams	Support
Image	
Max. Resolution	1920 × 1080
Max Frame Rate	Main stream: 25fps (1920×1080), 25fps (1280×960), 25fps (1280×720) Sub stream: 25fps (352×288), 25fps (640×360)
Image Setting	Rotate Mode, Saturation, Brightness, Contrast, Sharpness
Image Enhancement	Backlight Compensation, 3D Digital Noise Reduction, ROI
Network	
Network Storage	NAS (Support NFS, SMB/CIFS), ANR
Detection	Intrusion detection, Line crossing detection, Motion detection, Dynamic analysis
Alarm Trigger	Tampering alarm, Network disconnect, IP address conflict, Storage exception
Protocols	TCP/IP, UDP, ICMP, HTTP, HTTPS, FTP, DHCP, DNS, DDNS, RTP, RTSP, RTCP, PPPoE, NTP, UPnP, SMTP, SNMP, IGMP, 802.1X, QoS, IPv6, Bonjour
General Function	Anti-Flicker, heartbeat, mirror, password protection, privacy mask, watermark, IP address filtering, Anonymous access
Standard	ONVIF (PROFILE S, PROFILE G), PSIA, CGI, ISAPI
Interface	
Communication Interface	1 RJ45 10M/100M Ethernet port
On-board storage	Built-in Micro SD/SDHC/SDXC slot, up to 128 GB
Reset	Yes
General	
Operating Conditions	-30 °C ~ 60 °C, Humidity 95% or less (non-condensing)
Power Supply	DC12V ± 25%, PoE (802.3af)
Power Consumption	Max. 5W
Material	Base & Top Cover: Metal
IR Range	Up to 30 meters
Ingress Protection	IP67
Impact Protection	IK10
Dimensions	Φ111 × 82 mm
Weight	500g

Features and specifications are subject to change without notice. E&OE.